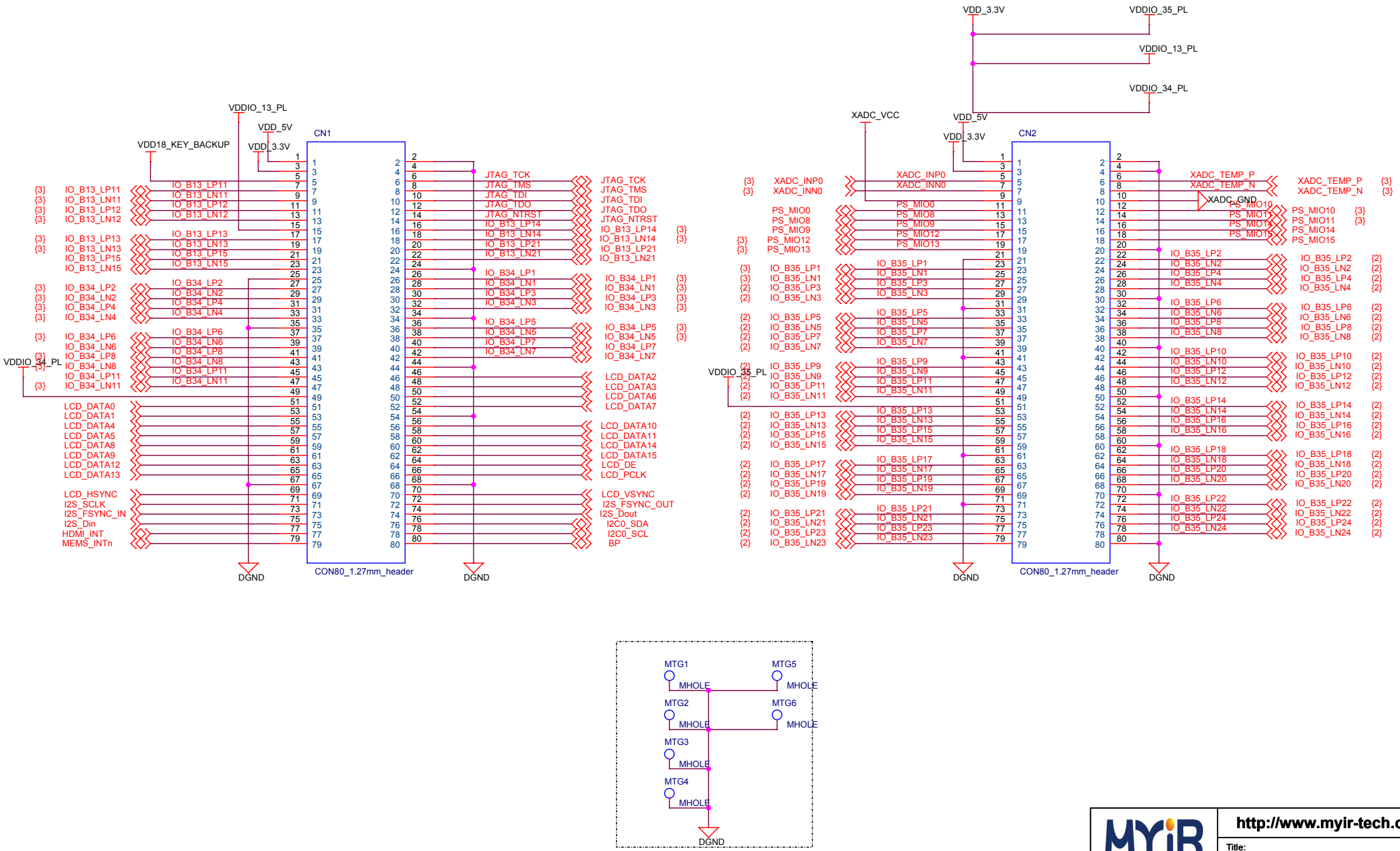

MYIR

http://www.myir-tech.com

Title: Z-turn IO Cape

Size: B	Document Number: P01_CONNECTOR	Rev: VER 1
Draw By: MYIR	Date: Monday, May 18, 2015	Sheet: 1 of 3

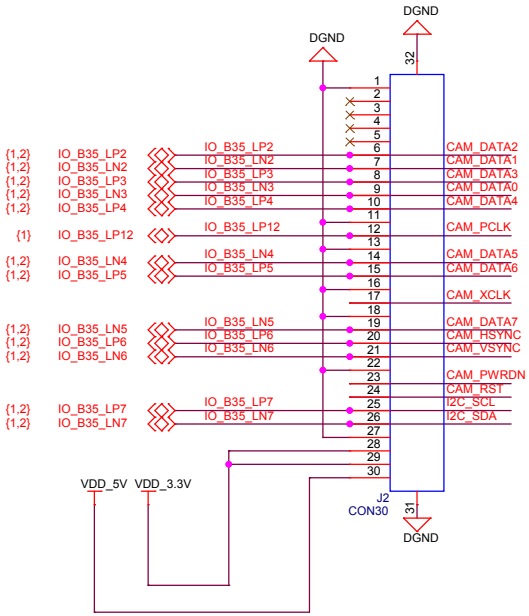

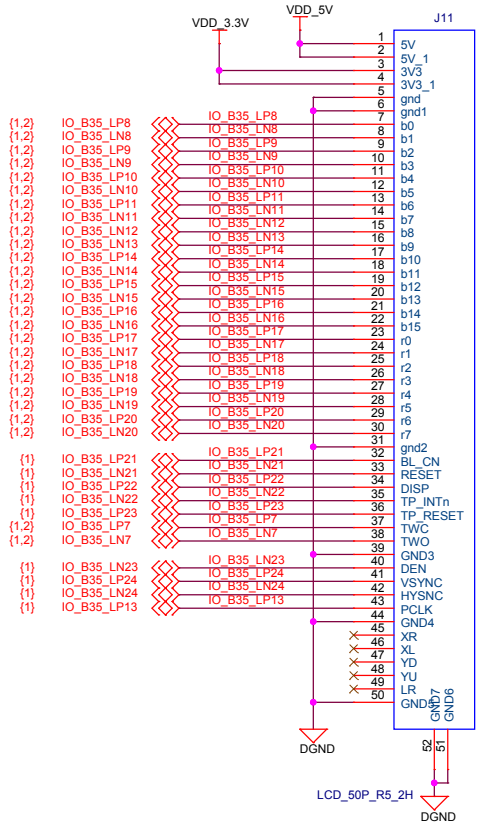

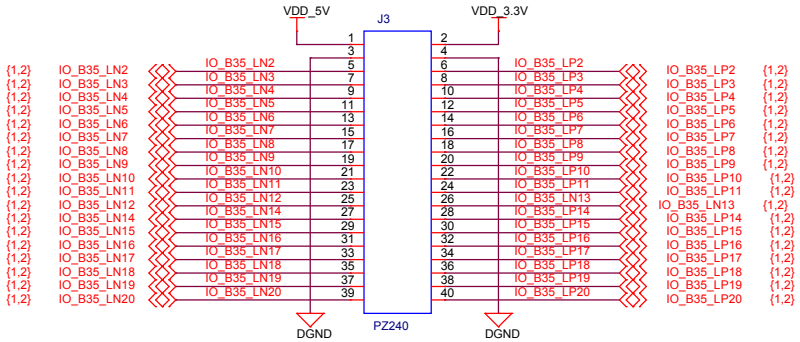

MYiR

http://www.myir-tech.com

Title: Z-turn IO Cape

Size: A3	Document Number: P02_LCD_Camera_IO	Rev: VER 1
Draw By: MYIR	Date: Monday, May 18, 2015	Sheet: 2 of 3

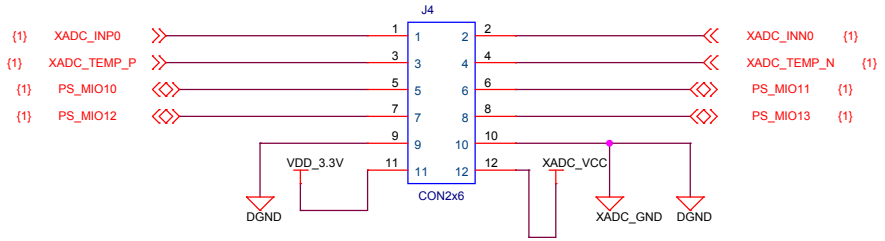

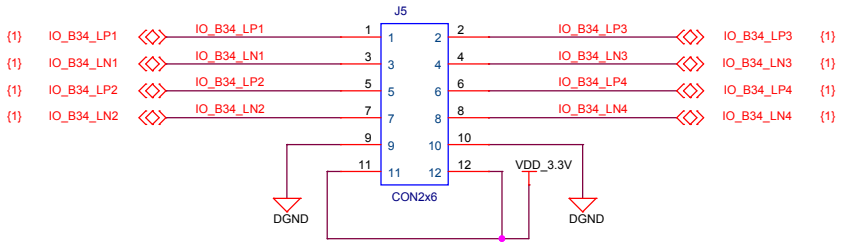

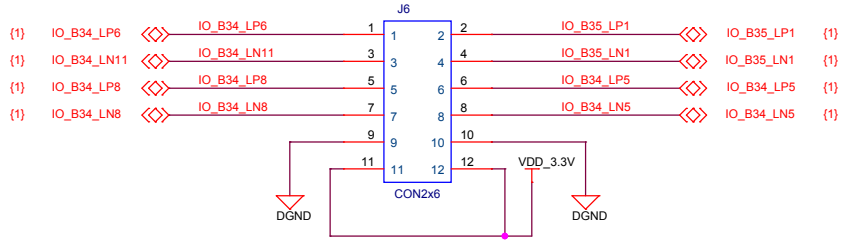

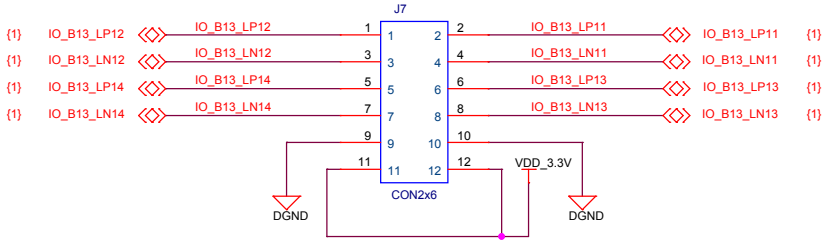

MYiR	http://www.myir-tech.com	
	Title: Z-turn IO Cape	
Size: A3	Document Number: P03_IO	Rev: VER 1
Draw By: MYIR	Date: Monday, May 18, 2015	Sheet: 3 of 3